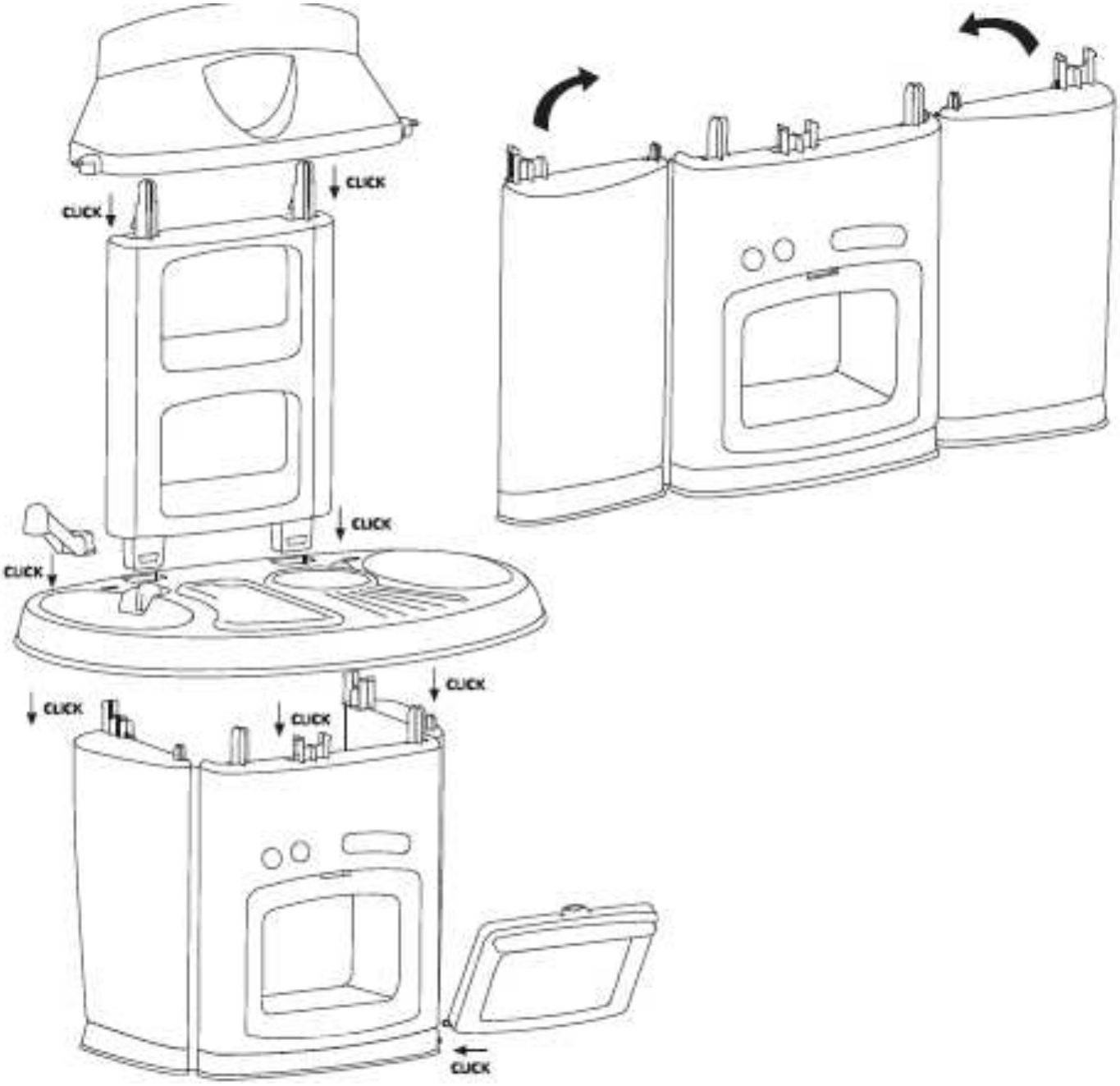
CLICK
CLICK
CLICK
CLICK
CLICK
CLICK
CLICK
CLICK